Rynglok technology

Ryan Sharkey – Product management, Satair group

Tomas Pascual – Product Manager, Satair Group

Powering Business Worldwide

© 2016 Eaton. All Rights Reserved.

Agenda

- Product overview (Video)
- What is Rynglok
- Why use Rynglok
- Rynglok fitting systems
  - R8 fittings
  - R5 fittings
- Design principles
  - Reliability
  - Approvals
  - Assembly
- Tool Kits
- Accessories
- Assembly process (Video)
- Rynglok kit part numbers
- Summary of advantages
- Support

Powering Business Worldwide

© 2016 Eaton. All Rights Reserved.

Video overview – Product descriptions

Play video

© 2016 Eaton. All Rights Reserved.

What is Rynglok?

- Rynglok is a tubing repair kit used to repair a hard line that has been damaged.
- It can be used to repair:

Pin hole leaks

Dented or bent tubing

Total failure of tubing

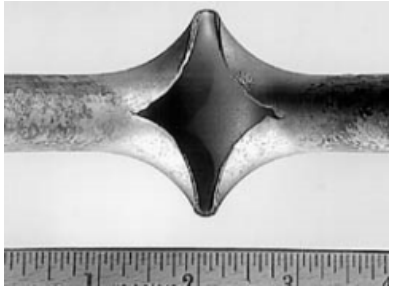

Powering Business Worldwide

© 2016 Eaton. All Rights Reserved.

Why use Rynglok?

- To maintain operational readiness and keep your aircraft flying.
- According to a large European operator, the below figures below are what they have calculated for delays and cancellations
  - Delay per hour $18K
  - Cancellation $131K
  - Turn-back $111K
  - Diversion $145K

- If Rynglok can be used to prevent just one cancellation, turn-back, diversion, or 3 to 4 hours of delays, it will have already paid for itself

Powering Business Worldwide

© 2016 Eaton. All Rights Reserved.

Rynglok fitting systems

Repair fitting (R8)

- Titanium repair fittings
- One fitting for all applications
  - For given tube od (outer DIA), same fitting can be used on TI, AL, CREA, thin wall, thick wall, at any pressure

OEM fitting (R5)

- Similar design, weight optimized for OEM
- Market leader for high pressure operating systems

Aluminum fitting (RA)

- Low pressure 6061T6 aluminum design

Powering Business Worldwide

© 2016 Eaton. All Rights Reserved.

Rynglok R8 tube fittings

Airline and military approved

Acceptance worldwide

- Over 1,000 tool kits in use
- Widely used by U.S. commercial airlines
- Approved by all U.S. Military groups

Fittings in use

- Product launched in 1988
- Well over 1,000,000 fittings in service

Powering Business Worldwide

© 2016 Eaton. All Rights Reserved.

Rynglok R8 repair fitting

Lightweight titanium construction

Repairs all types of tubing

- Any materials
  - Aluminum
  - Stainless
  - Titanium
- Any wall thickness
- Any pressures

Operating pressures up to 8,000 psi (551 bar)

Powering Business Worldwide

© 2016 Eaton. All Rights Reserved.

Rynglok R5 fittings

Lightweight titanium construction

Traditionally used by OEMs

- Any materials
  - Aluminum
  - Stainless
  - Titanium
- Any wall thickness
- Any pressures

Operating pressures up to 5,000 psi (344 bar)

Sold to AS5958, ABS and other various customer specific standards

Powering Business Worldwide

© 2016 Eaton. All Rights Reserved.

Rynglok design principles

Fitting ring is strong enough to squeeze the fitting body and tube

Fitting ring acts as a “rubber band” to maintain constant fitting to tube contact

No fitting spring back when tool released as experienced with crimped style fittings

Internal grooves on fitting bite to seal onto tube

Powering Business Worldwide

© 2016 Eaton. All Rights Reserved.

Rynglok design principles

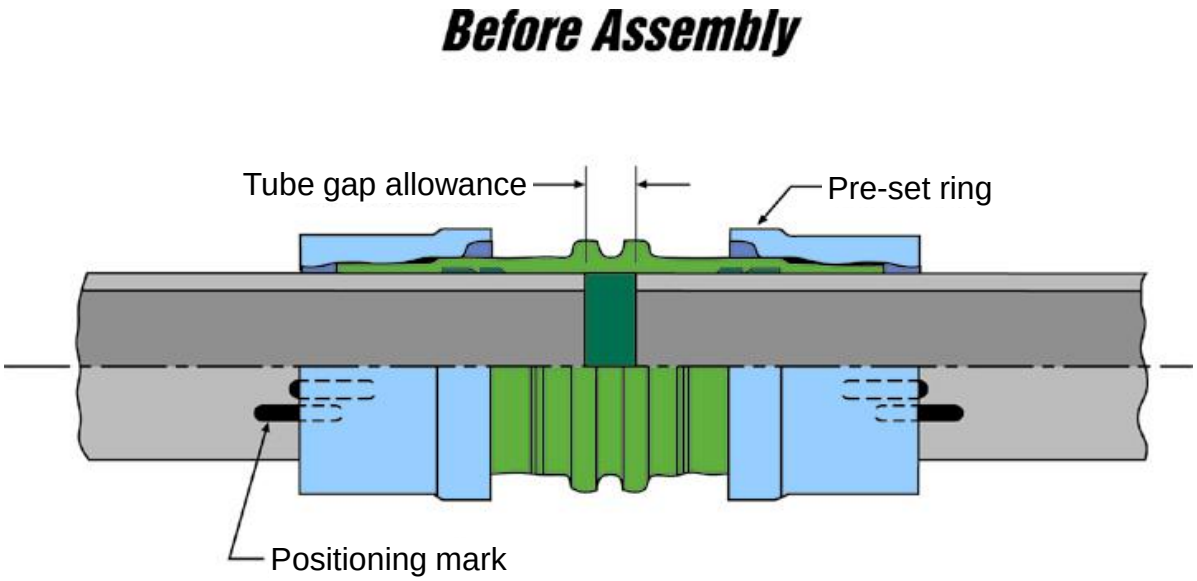

As rings advance, fitting is swaged onto tube

© 2016 Eaton. All Rights Reserved.

Rynglok design principles

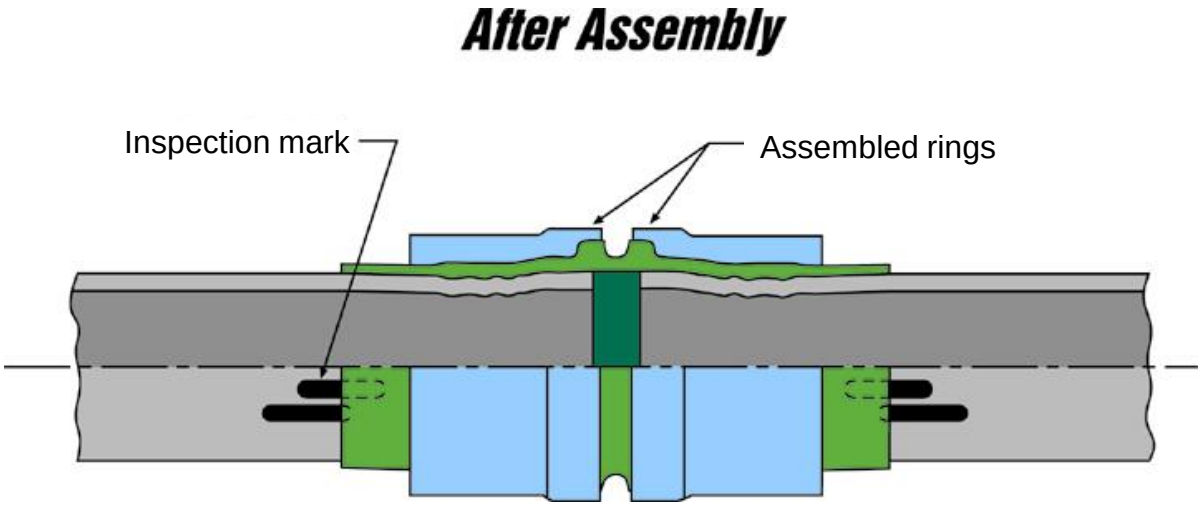

Once rings are advanced, a constant load is applied to maintain swage

© 2016 Eaton. All Rights Reserved.

Rynglok reliability

Over 1,000,000 fittings in the field

Over 10,000 fittings laboratory tested by

- Eaton
- U.S. Military
- Major OEMs

Over 100 Rynglok test reports published

Proven stronger than standard tube

Rynglok separable end fittings

Powering Business Worldwide

© 2016 Eaton. All Rights Reserved.

Rynglok approvals R5 & R8

Commercial OEM approvals

R8

• Airbus (all platforms)	1997
• Boeing (all except 787*)	1997
• Lockheed (L1011)	1991
• Cessna (Citation models)	1992
• ATR 42/72 (all models)	2000
• de Havilland (DASH 8)	1994
• Embraer (all models)	2003
• Bombardier CRJ	2004

R5

- Airbus (A350 & A380)
- Boeing (737, 747-8, 787)

Powering Business Worldwide

© 2016 Eaton. All Rights Reserved.

Rynglok approvals R8

Military approvals

- All U.S. Armed Forces
- German Air Force
- French Army
- Israeli Air Force

Powering Business Worldwide

© 2016 Eaton. All Rights Reserved.

Rynglok repair kits

- Compact case
- Everything in one package
- Portable
- Customizable
- Tooling - 180 degree access

Powering Business Worldwide

© 2016 Eaton. All Rights Reserved.

Hydraulic pump accessories

Foot-operated air/oil intensifier

P/N 10-00401A

Hand-held remote control air/oil intensifier

P/N 10-00402TA

Powering Business Worldwide

© 2016 Eaton. All Rights Reserved.

Rynglok assembly

Fast	Can complete a repair in minutes (or less)
Easy	Training can be done in less than 30 minutes
Eaton provided training	Free training and service, as needed, by Eaton or Satair

Powering Business Worldwide

© 2016 Eaton. All Rights Reserved.

Video overview – Assembly process

Play video

© 2016 Eaton. All Rights Reserved.

Rynglok repair fittings

- State of the art in repair
- Simple to use

http://www.eaton.com/Eaton/ProductsServices/Aerospace/LiteratureLibrary/index.htm?litlibtarget=979679288135

- TF100-1 Rynglok bulletin, R5 system
- TF100-17 Rynglok bulletin, R8 system
- TF100-75 R5 cross ref to AS standards and fittings
- TF100-20 R8 wall chart, configuration options
- TF100-67 Installation guide
- DS100-53 Installation sequence

© 2016 Eaton. All Rights Reserved.

Rynglok repair kit part numbers

Type of Kit	Manufacturer	Model	Part Number with tube cutters/deburrers (recommended)	Part Number without tube cutters/deburrers	Tool Sizes Included in Kit
R5	Airbus	A350	RCLK5C01S025	N/A	-4, -6, -8, -10, -12, -16
	Airbus	A380	RCLK5C01S010	N/A	-4, -6, -8, -10, -12, -16, -20
	Boeing	747-8 787	RCLK5C01S020	RTLK5-01S105	-4, -6, -8, -10, -12, -16, -20
	Boeing	737	RCLK5C01S002	RTLK5-01S111	-4, -6, -8, -10, -12
R8	Airbus	A320 A330 A340 A380	RCSK8-02-065	RTSK8-02-005	-4, -6, -8, -10, -12, -16, -20, -24
	Boeing	737 747 757 767 777	RCSK8-02-006	RTSK8-02-006	-4, -6, -8, -10, -12, -16, -20
	N/A (Full Kit)	N/A (Full Kit)	RCSK8-02-002	RTSK8-02-001	-3, -4, -5, -6, -8, -10, -12, -14, -16, -20, -24

Powering Business Worldwide

© 2016 Eaton. All Rights Reserved.

Rynglok advantages

- Simple to use
- Easy training
- Repeatable results; repairs depend on following procedure and not skill of mechanic
- Reliable
- Quick repairs reduce aircraft downtime; repairs can be conducted in a 1/3 of the time as compared to other systems
- Only requires 180 degree access to the fitting to perform repair
- Repairs are permanent, therefore new tube is not needed – save money

Powering Business Worldwide

© 2016 Eaton. All Rights Reserved.

Rynglok advantages continued

- Tooling used for repair does not wear
- Tools do not need to be assembled to conduct a repair
- Stocking fittings is easy, since fittings come in Titanium only. The fittings can be used on tubes made out of aluminum, CRES, or titanium (R8 Only)
- Possibility of installing incorrect pressure fitting is less probable, since only one type of material used
- Fittings are rated to 8,000 PSI operating pressure, which cover a wide range of applications (R8 only)
- Allows for repair of fittings the aircraft is equipped with at delivery (R5 Only)

Powering Business Worldwide

© 2016 Eaton. All Rights Reserved.

Eaton support

- Free training available
- Regional application/sales engineers
- Worldwide distribution partners
- Tech support team at factory
- Custom applications and modification support

Powering Business Worldwide

© 2016 Eaton. All Rights Reserved.

Contact for more information

Mr. Kevin Pike

Product Line Manager

Jackson, MI

KevinHPike@Eaton.com

Powering Business Worldwide

© 2016 Eaton. All Rights Reserved.

Questions/Comments

Powering Business Worldwide

© 2016 Eaton. All Rights Reserved.

EATON

Powering Business Worldwide